# HANDLE FOR CONTROL: 852348

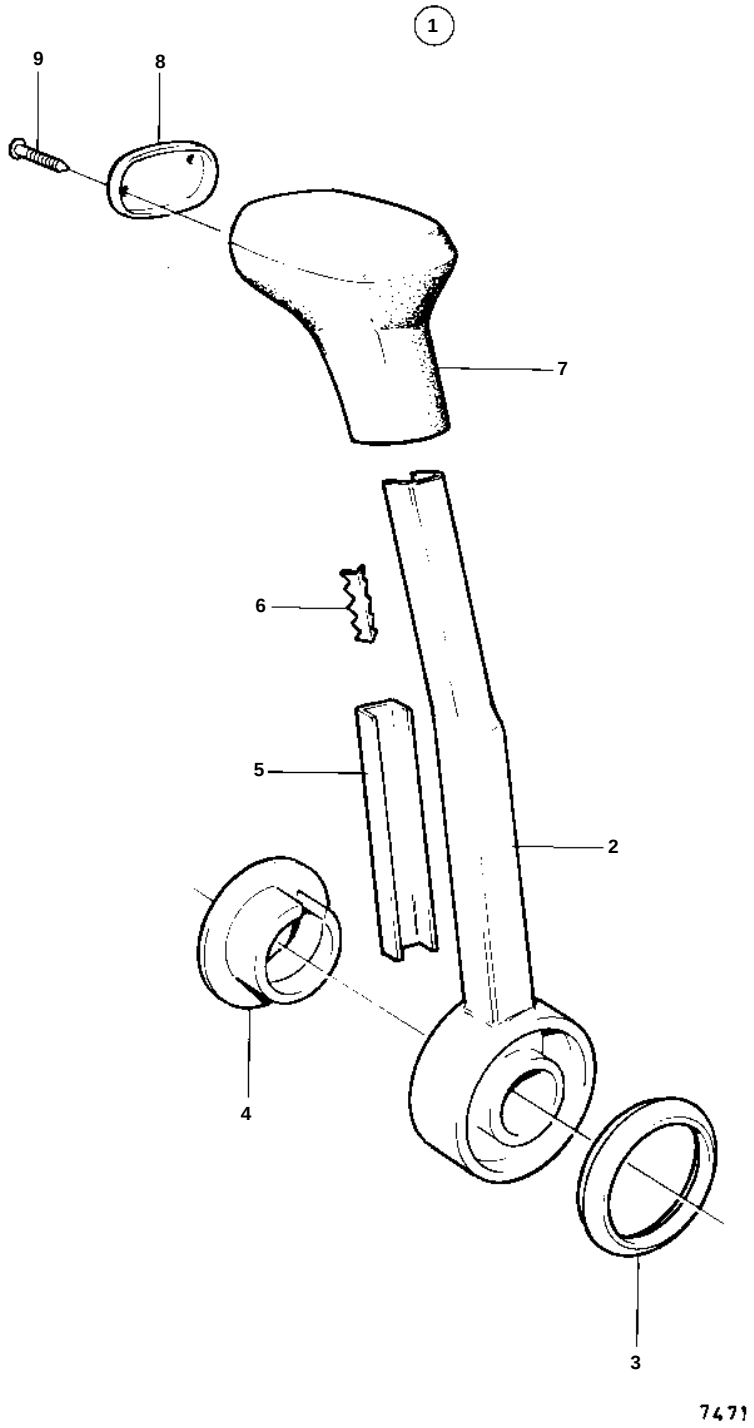

# HANDLE FOR CONTROL: 852348



| REF | PART NO. | QTY | DESCRIPTION | |
|---|---|---|---|---|
| 1 | 852348 | 1 | Lever | |
| 2 | | 1 | · HANDLE | IK |
| 3 | | 1 | · RING | IK |
| 4 | | 1 | · SUPPORT RING | IK |
| 5 | | 1 | · BAR | IK |
| 6 | | 1 | · LOCK PLATE | IK |
| 7 | | 1 | · KNOB | IK |
| 8 | | 1 | · COVER | IK |
| 9 | 853003 | 2 | · Nail | IK |